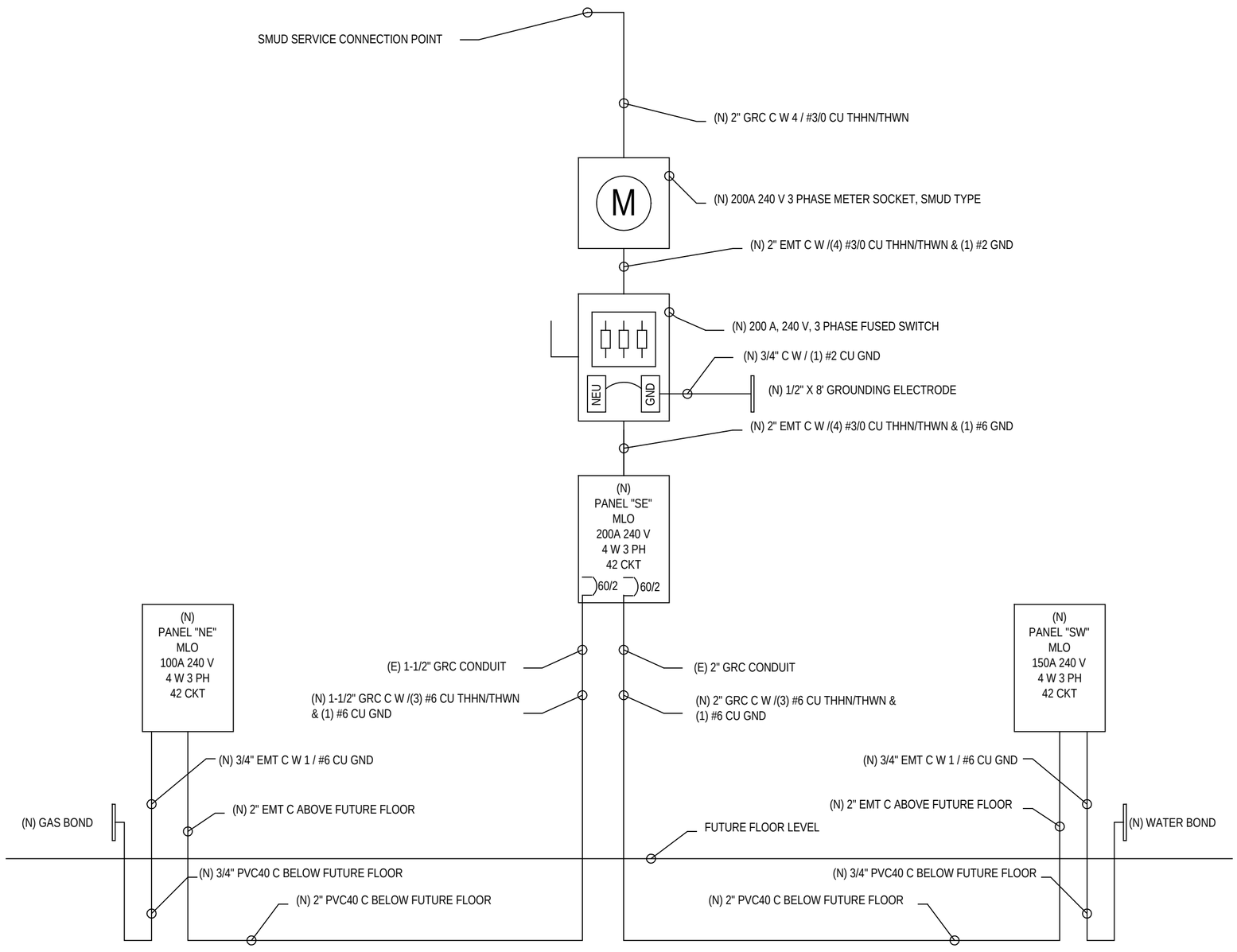

ELECTRICAL ONE-LINE DIAGRAM

NO SCALE

ICELAND SKATING RINK
RESTORATION PROJECT

CONDUIT FILL CALCULATION

Service Conductors	Total		
Number of Conductors	4	4	
AWG		3/0	
Area	1.0716	1.0716	
Pipe required	2 inch		

Meter / 200A Switch feed	Total		
Number of Conductors	5	4	1
AWG		3/0	2
Area	1.1874	1.0716	0.1158
Pipe required	2 INCH		

SE Panel Feed	Total		
Number of Conductors	5	4	1
AWG		3/0	2
Area	1.1874	1.0716	0.1158
Pipe required	2		

SW Panel Feeds	Total	
Number of Conductors	4	4
AWG		6
Area	0.2028	0.2028
Pipe required	3/4	

NE Panel Feeds	Total	
Number of Conductors	4	4
AWG		6
Area	0.2028	0.2028
Pipe required	3/4	

GND Electrode	Total	
Number of Conductors	1	1
AWG		2
Area	0.1158	0.1158
Pipe required	1/2	

ABBREVIATIONS

ABBREVIATIONS

C	CONDUIT
C. O.	CONDUIT ONLY WITH PULL ROPE
CKT	CIRCUITS
(E)	EXISTING
EMT	EMT CONDUIT
GFIC	GROUND FAULT INTERRUPTER CIRCUIT
GND	GROUND
GRC	RIGID CONDUIT
MCB	MAIN CIRCUIT BREAKER PANEL
MLO	MAIN LUG ONLY PANEL
(N)	NEW
NEU	NEUTRAL
PVC	PVC CONDUIT, SCH 40
PFB	PROVISION FOR FUTURE BREAKER
RIG	RIGID CONDUIT
WP	WEATHER PROOF

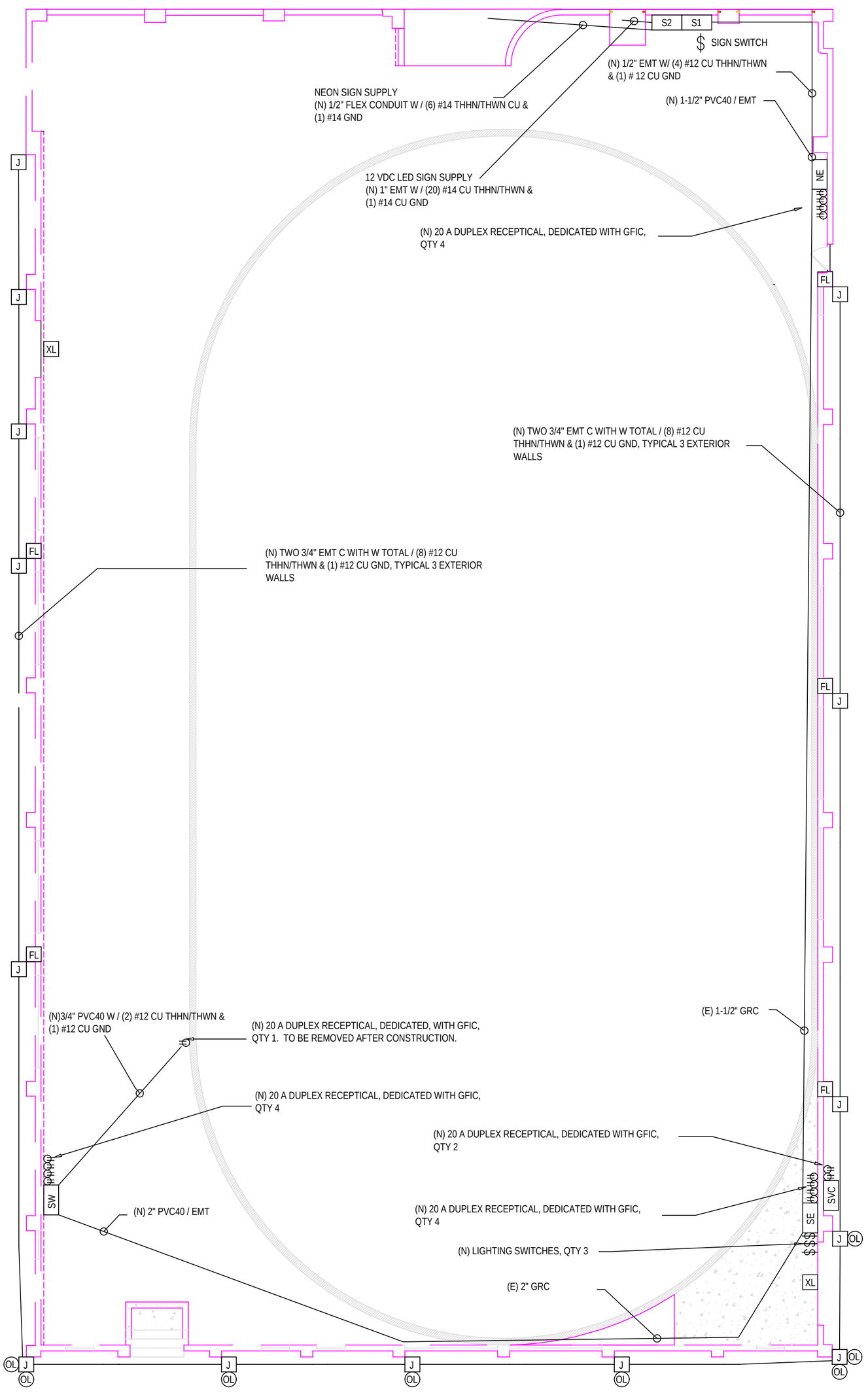

NOTES

1. SMUD SERVICE WILL INITIALLY BE 240V, 200A, 4 WIRE DELTA CONNECTED. SERVICE WILL CHANGE TO 208V, 200A, 4 WIRE WYE CONNECTION AT FUTURE DATE.
2. PER NOTE 1, "B" PHASE CONDUCTOR, ~200V , SHALL BE MARKED WITH ORANGE TAPE AND SHALL NOT BE USED FOR 120V CIRCUITS.
3. PER NOTE 1, ALL PANELBOARDS SHALL HAVE NAME PLATES NOTING SERVICE TYPE AND VOLTAGE. NAME PLATES SHALL BE UPDATED WHEN SERVICE CHANGES AT FUTURE DATE
4. ALL PANELBOARDS SHALL BE RATED FOR SPECIFIED VOLTAGE OR HIGHER
5. ALL ENCLOSURES SHALL BE RAIN PROOF, NEMA 3R
6. GFIC CIRCUIT BREAKERS SHALL BE USED ON BRANCH CIRCUITS WITH RECEPTACLES.
7. ALL RECEPTACLES SHALL BE EQUIPPED WITH IN-USE RAIN COVERS
8. FLOODLIGHTS (FL) WILL BE MOUNTED ON 21' 2" RIGID CONDUIT POLES ATTACHED TO BUILDING CONCRETE WALLS
9.

FIXTURES

FL	FLOOD LIGHT	250W PSMH, 16" X 16" POLE MOUNT	E-CONOLIGHT E-HR4P25QZ
OL	OUTDOOR LIGHT	42W CFL CFL WALL PACK	E-CONOLIGHT E-WP1F421Z
XL	EXIT SIGN WITH LIGHT	NEMA 4R LED EXIT SIGN WITH LIGHT, BATTERY	GREENTORCH XWLC

LOAD CALCULATION

LOAD	KVA	DESCRIPTION
4	KVA	CONTINUOUS NON-MOTOR
1.0	KVA	25% CONTINUOUS NON-MOTOR
2	KVA	NON-CONTINUOUS
30	KVA	RECEPTACLE (FIRST 10KVA)
14.2	KVA	RECEPTACLE (BALANCE AT 50 %)
0.5	KVA	MOTOR LOAD
0.1	KVA	25% OF LARGEST MOTOR
0	KVA	KITCHEN EQUIPMENT
0	KVA	HOTEL/MOTEL DEMAND
0	KVA	ARC WELDERS
0	KVA	RESISTANCE WELDERS
51.8		LOAD KVA
127.0		AMPS AT 240 V 3 PHASE

SYMBOLS

- J — JUNCTION BOX
- S# — ENCLOSURE
- SE — PANELBOARD
- XL — EXIT SIGN WITH BATTERY LIGHT
- FL — FLOOD LIGHT, POLE MOUNTED PER DETAIL, 250 W PSMH, 120 V
- OL — OUTDOOR LIGHT, WALL PACK, 42 W, 120 V
- RECEPTICAL, 20 A, 120 V, DUPLEX WITH IN-USE COVER
- SWITCH, SPST, 20 A

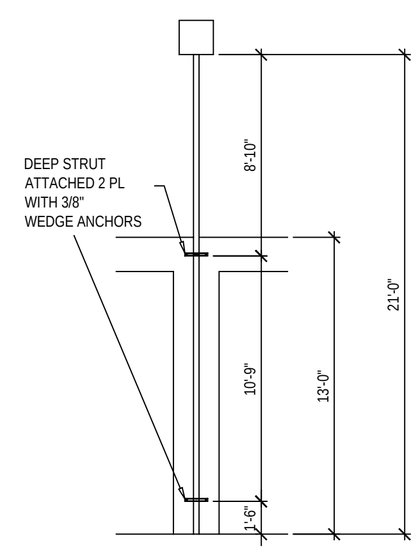

FLOODLIGHT MOUNTING DETAIL

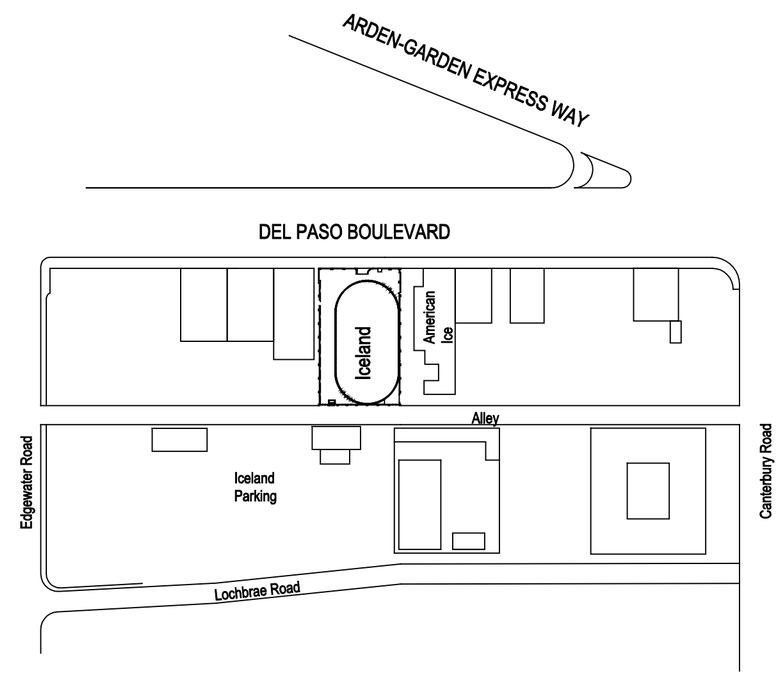

ICELAND VICINITY

NO SCALE

ICELAND SKATING RINK
RESTORATION PROJECT

REVISION NUMBER
COMMENT RE: #
REVISION CLOUD

REVISIONS
NO. DATE REMARKS

NOT TO SCALE
DRAWN 11-11-10

ICELAND SKATING RINK RESTORATION
1430 DEL PASO BLVD
SACRAMENTO CALIFORNIA 95815

OWNER / APPLICANT
ROB KERTH
SACRAMENTO, CALIFORNIA 95815
PHONE 916-799-3121

ELECTRICAL PLAN