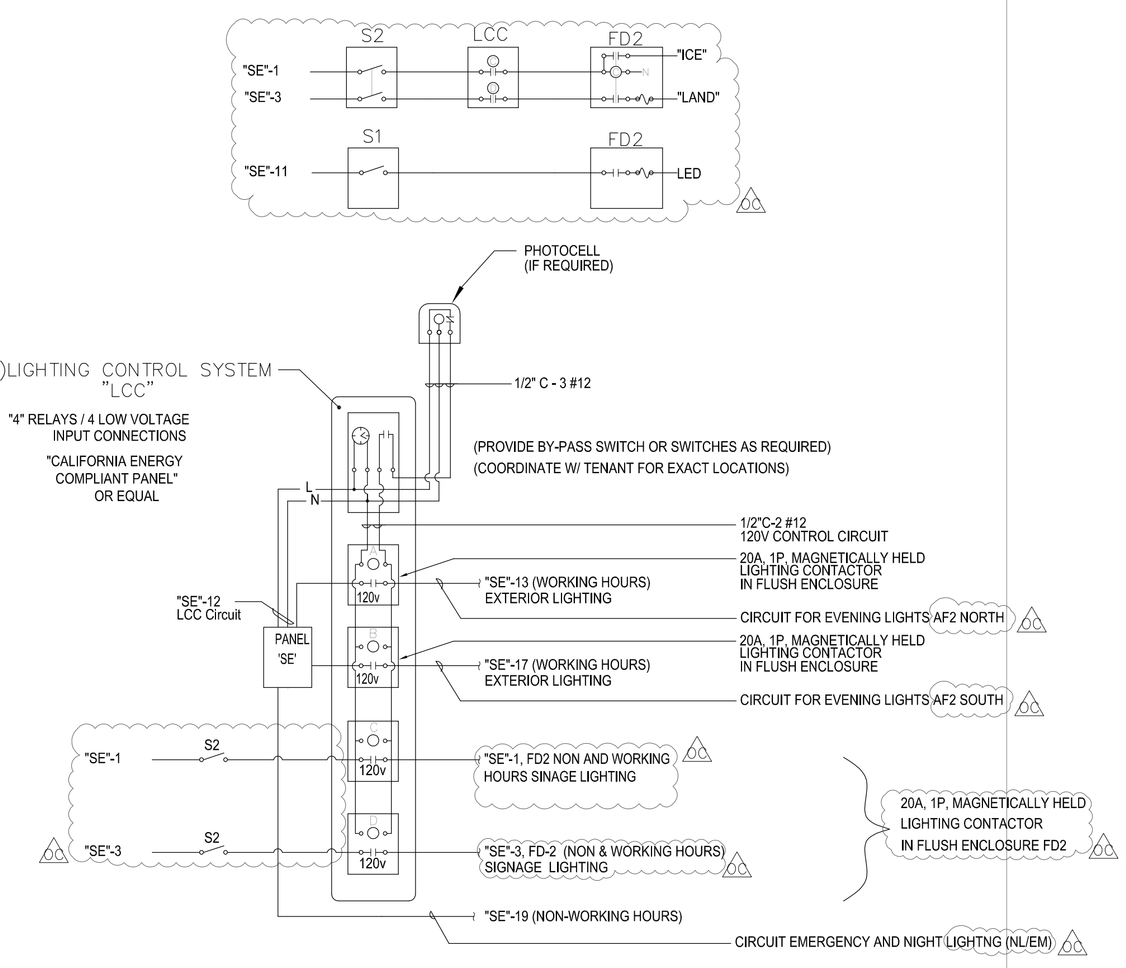

LIGHTING CONTROL DIAGRAM "LCC"
NTS

SHEET NOTES

1. PROVIDE AND INSTALL NEW ENCLOSED, NEMA 3R ENCLOSED CABINET FOR MANUAL LIGHT SWITCHING AS REQUIRED.
2. PROVIDE AND INSTALL NEW ENCLOSED NEMA 3R CABINET FOR NEW CALIFORNA TITLE 24 APPROVED LIGHTING CONTROL SYSTEM.
3. MOUNT LIGHTING PER DETAIL. SEE MOUNTING DETAIL BELOW.

SVC (NEW)OVER HEAD FEED METER TO 200A FUSED DISCONNECT, (208, 3PH, 4W SYSTEM) NEMA 3R ENCLOSURES.
SE (NEW)MAIN PANEL "SE" MLO (200A, 208V,3PH,4W) w/ NEMA 3R ENCLOSURE.
NE NOT USED
SW NOT USED

LCC LIGHTING CONTROL PANEL "LCC"
FD2 LED LIGHTING CONTROL W/POWER SUPPLY FOR EXISTING APPROVED SIGNAGE.

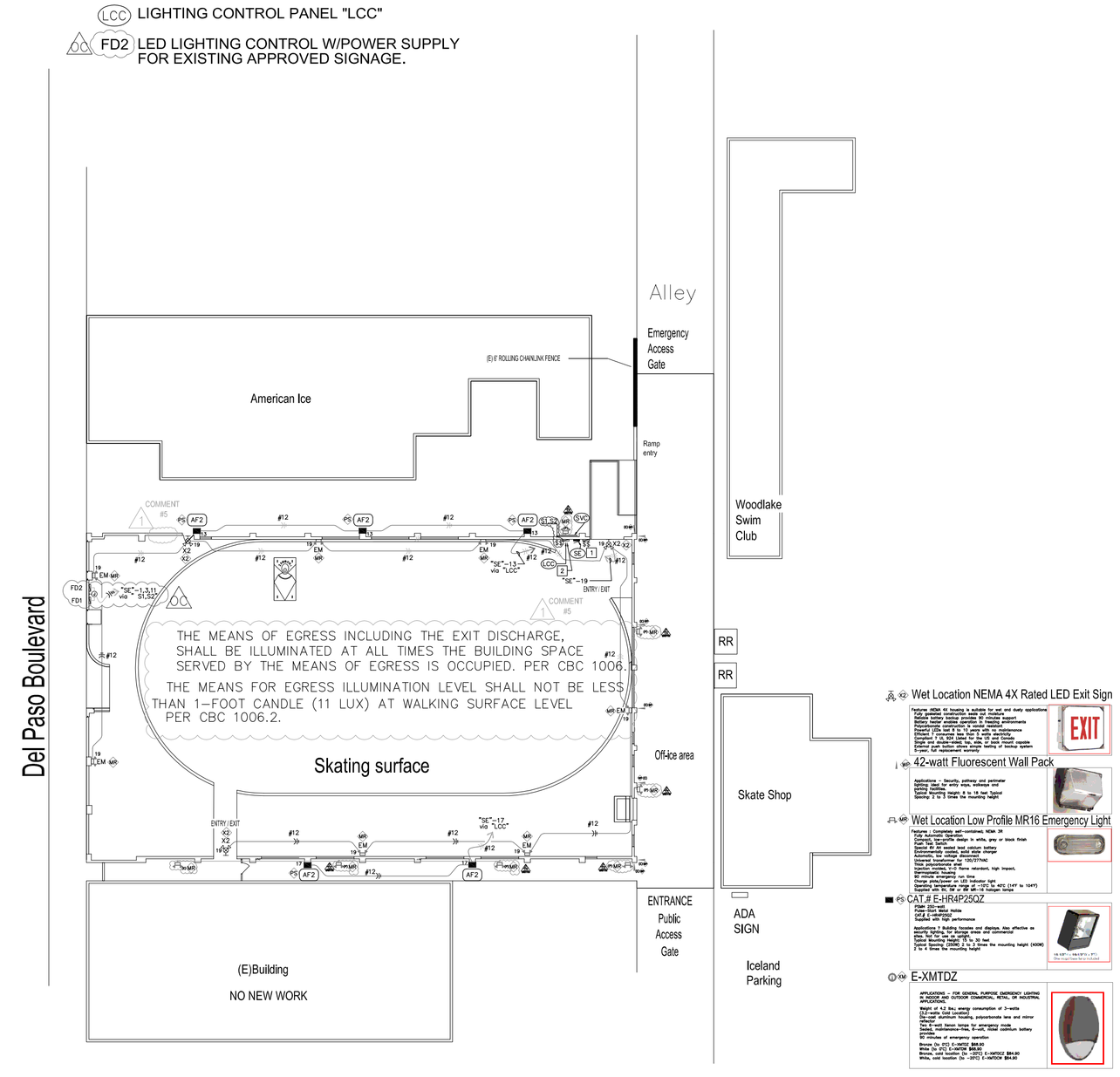

ELECTRICAL FLOOR PLAN– LIGHTING
A E2.1 SCALE: 1/8" = 1'-0"
(E)BUILDING, 1430 DEL PASO ROAD, SACRAMENTO, CA.

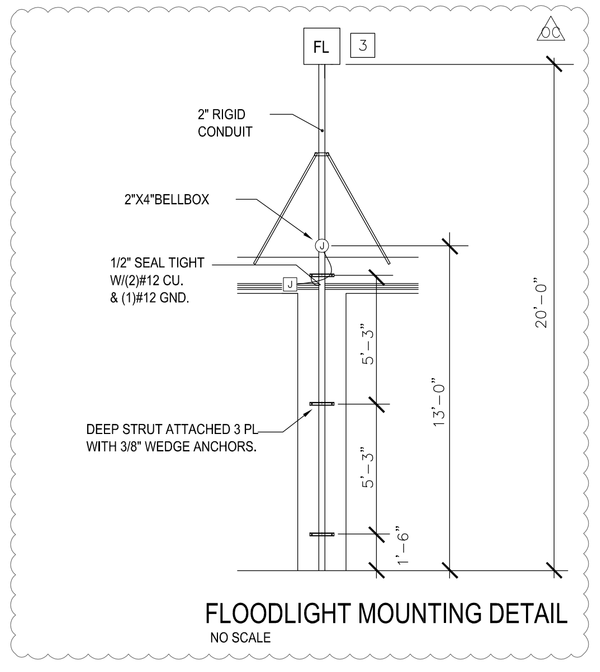

FLOODLIGHT MOUNTING DETAIL
NO SCALE

NOTES TO CONTRACTOR

1. COORDINATE ALL WORK WITH ARCHITECTURAL NOTES & PLANS PRIOR TO ANY ELECTRICAL WORK.

EXTERIOR FIXTURE SCHEDULE
ICELAND SKATING RINK (RENOVATION)

5	AF2	250 WATT PSMH FLOODLIGHT POLE MOUNTED w/ADJUSTABLE FITTER ENCLOSED	Magnetic 1/1 1-250W PSMH 120V 271	Pole mounted 20'-0"	E-conolight OR EQUAL FLOOD LIGHT SERIES
EXTERIOR					
–		FIXTURE REMOVED "NOT USED"			
EXTERIOR					
6	EM	EMERGENCY LIGHT SURFACE	NONE INCL W/FIXTURE 120/277V 33	SURFACE WALL 86" A.F.F.	E-conolight OR EQUAL
NOT CALCULATED				EXIT & EMERGENCY SERIES	
5	X2	EXIT SIGN & LIGHT COMBO w/BACK-UP BATT. SURFACE WALL SINGLE FACE-GREEN	NONE LED INCL W/FIXTURE 120/277V 33	MH: @ WALL OVER DOOR	E-conolight OR EQUAL
NOT CALCULATED				EXIT & EMERGENCY SERIES	

COMMENT #5

OCCUPANCY DEVICE SCHEDULE
ICELAND SKATING RINK (RENOVATION)

APPROXIMATE QUANTITY	TYPE	DESCRIPTION/MANUFACTURE	SPECIFIED FOR:	LOCATION	NOTE:
1	LIGHTING CONTROL PANEL "LCC"	GREENGATE OR EQUAL	SPEC GRADE LIGHTING CONTROL	NEAR MAIN PANEL "SE"	(4) RELAY

WITH 3/8" WEDGE ANCHORS.

NOTES TO PLAN CHECKER

SCOPE

1. THIS IS A SINGLE STORY, (REMODEL) FIRE RESTORATION OF SKATING RINK. NO ROOF ON BUILDING, WALLS ONLY, ALL FIXTURES TO BE WET TYPE. DESIGN WILL COVER SKATING SURFACE AND OFF-ICE AREA'S. EXTERIOR LIGHTING "ONLY" LIGHTING FOR THIS FACILITY FALLS UNDER LIGHTING FOR SPORTS; THERFORE IS NOT IN REGULATION OF TITLE 24, PER CEC 147 ALTHOUGH, IS NOT EXEMPT FROM TITLE 24 ARE OFF-ICE AREA AND EXTERIOR EXITS FROM BUILDING. SEE TITLE 24 SHEET E3.1. §
2. SEE SWITCHING REQUIREMENTS ABOVE.
3. INSTALLATION AND TESTING OF NEW EMERGENCY & EXIT LIGHTS AS SHOWN IN THE LIGHTING PLAN ABOVE.
4. CURRENT LIGHTING CONTROLS AND DAY & NIGHT LIGHTING ARE TO REMAIN IN PLACE AND BE TESTED AS REQUIRED.
5. SEE TITLE 24 CALCULATIONS, SHEET E3.1.

1/2" SEAL TIGHT

ELECTRICAL CONTRACTOR TO PROVIDE AND INSTALL ALL ELECTRICAL EQUIPMENT TO THE 2011 CALIFORNIA ELECTRICAL CODE AND THE 2011 CALIFORNIA ENERGY CODE PER TITLE 24 STANDARDS.

COOPER
CONSULTING
5821 DRY CREEK ROAD, APT 15
RIO LINDA, CA 95673
PHONE: 916-991-3368
CELL: 916-548-7506
FAX: 196-991-3368
email: coopsnet@sbcglobal.net
DESIGN & DRAFTING SERVICES

STAMP

RESTORATION
ICELAND SKATING RINK
1430 DEL PASO ROAD
SACRAMENTO, CA 95815
PROJECT NAME/ADDRESS

July 19, 2011
PROJECT DATE

G. COOPER —
DRAWN/DESIGNER CHECKED

PLAN CHECK COMMENTS JANUARY 11, 2011
OWNER CHANGES JULY 19, 2011
REVISIONS/DATES

ELECTRICAL
FLOOR PLAN
LIGHTING
SHEET TITLE

NEW SHEET
E2.1
SHEET 3 OF 5